TRAFFIC CONTROL PERSONS SHALL NOT ALLOW TRAFFIC TO STOP NOR ALLOW TRAFFIC TO BACKUP WITHIN 50' OF ANY RAILROAD CROSSING. STRICTEST PRECAUTIONS WILL BE MADE AND EXECUTED AS PER THE 2012 MUTCD RAILROAD CROSSING NEAR A WORK ZONE SPECIFICATIONS. IF ANY WORK IS TO BE DONE UNDER OR ATOP ANY RAILROAD TRACKS NO WORK SHALL COMMENCE UNTIL THE RAILROAD HAS BEEN PROPERLY NOTIFIED AND THE RAILROAD HAS PROPERLY DIVERTED ALL RAIL CARS AND

mph feet

SPEED	TAPER	SIGN SPACING	TAPER	TANGENT
25	125'	500'	25	50
30	180'		30	60
35	245'		35	70
40	320'		40	80
45	540		45	90
55	660'		55	110

BUFFER(1/2taper) SHOULDER(1/3taper)

ELEC

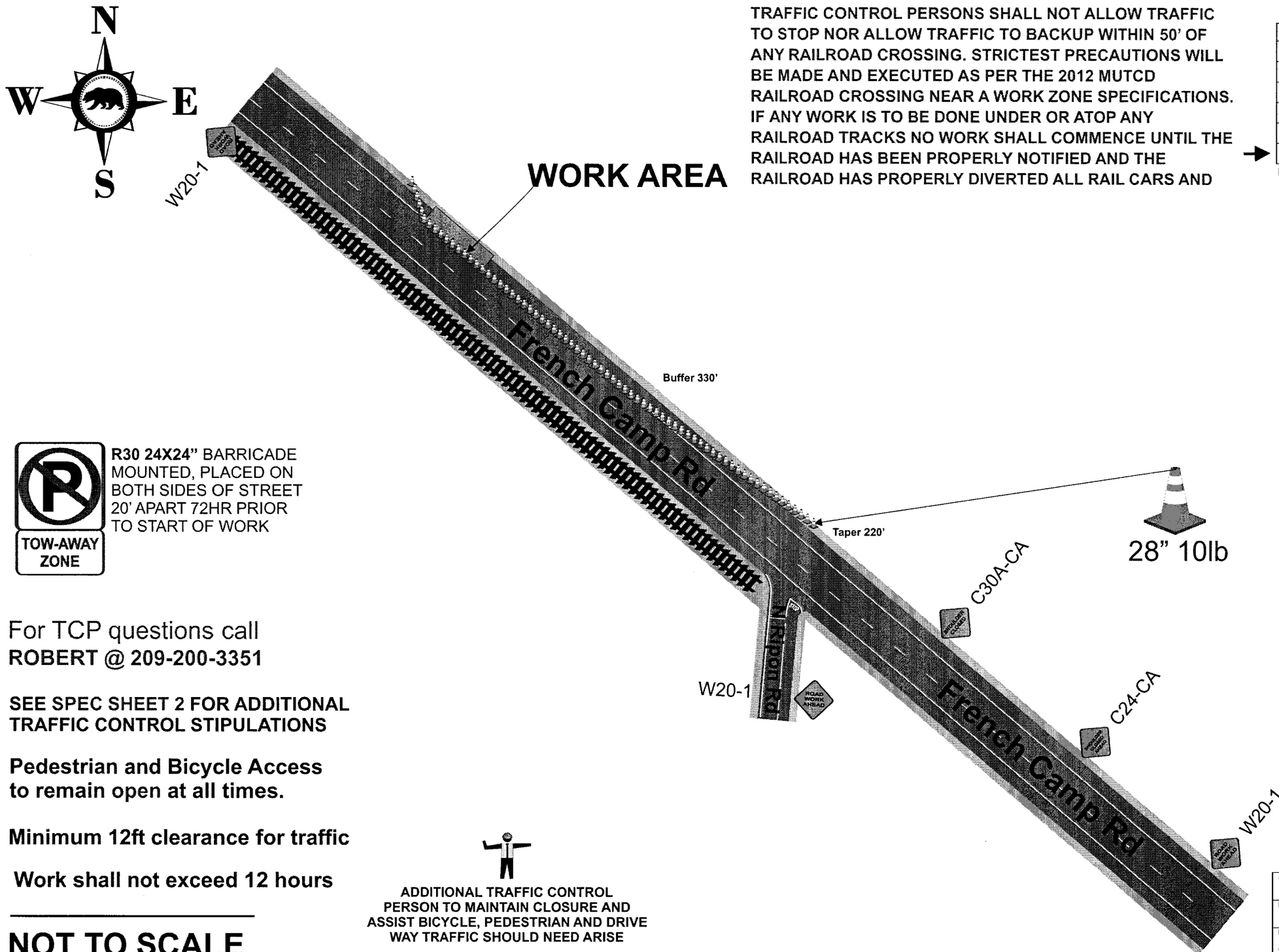

SIGNS BEING USED

SHOULDER CLOSED 48X48" C30A-CA

SHOULDER WORK AHEAD 48X48" C24-CA

ROAD WORK AHEAD 48X48" W20-1

R30 24X24" BARRICADE MOUNTED, PLACED ON BOTH SIDES OF STREET 20' APART 72HR PRIOR TO START OF WORK

TOW-AWAY ZONE

For TCP questions call
ROBERT @ 209-200-3351

SEE SPEC SHEET 2 FOR ADDITIONAL TRAFFIC CONTROL STIPULATIONS

Pedestrian and Bicycle Access to remain open at all times.

Minimum 12ft clearance for traffic

Work shall not exceed 12 hours

ADDITIONAL TRAFFIC CONTROL PERSON TO MAINTAIN CLOSURE AND ASSIST BICYCLE, PEDESTRIAN AND DRIVE WAY TRAFFIC SHOULD NEED ARISE

NOT TO SCALE

PM# 31119066

Owner: SAN JOAQUIN COUNTY		
Project Location: 14577 French Camp Rd		Project City: Ripon, CA
Prime Contractor: PG&E		Traffic Control Contractor: City Rise Services, Inc.
Phone: 209-333-0807	Sheet Number: PS-1	Date: 7/27/2015
Prepared By: CITY RISE SERVICES, INC		

HOURS OF WORK SHALL BE DETERMINED BY SAN JOAQUIN COUNTY

CLOSURE STIPULATIONS AND REQUIREMENTS THAT MUST BE FOLLOWED AT ALL TIMES
DRIVEWAY ACCESS SHALL REMAIN OPEN OR ACCESSIBLE AT ALL TIMES

- **All lane closures shall meet or exceed CA MUTCD 2014 specifications as well as conform to hours of work set forth by the County.**
- **All areas of work when encroaching upon sidewalk access OR pedestrian safety shall have the latest CA MUTCD 2014 Edition, Temporary Traffic Control, sidewalk closure detour detail in place to ensure pedestrian and public safety.**
- **Pedestrian traffic shall at all time have a minimum 4 feet wide area of travel.**
- **All open excavation areas shall be backfilled or trench plated prior to public usage.**
- **All closures set forth in this TCP are the minimum allowed on project, field conditions may change requiring further traffic safety devices or traffic control person to ensure safety of traveling public, pedestrians as well as work forces.**
- **All changes to ensure safety will be made immediately to ensure a safe environment for all parties.**
- **All traffic control devices, vehicles and personnel must be suited for the purpose intended as well as meet or exceed latest CA MUTCD 2014 Edition, Temporary Traffic Control requirements as well as County requirements.**
- **All Devices shall be removed when no longer required.**
- **All flaggers shall be certified and all intersections shall be flagged when required as shown on plans.**
- **If work is done at night or encroaches on the hours of darkness all road work ahead signs shall have a flashing beacon, light towers will be used for flaggers and work areas and all other latest CA MUTCD 2014 Edition, Temporary Traffic Control requirements shall be met or exceeded as well.**
- **NOT TO SCALE—SPACING OF SIGNS, TAPER AND TANGENTS WILL BE SPACED AS PER TABLE HAS SET FORTH AS GOVERNED BY TRAVEL SPEEDS.**
- **All traffic devices shall meet or exceed latest CA MUTCD 2014 Edition, Temporary Traffic Control. All signs shall be high intensity night time reflective, 48"x48" roll up signs. All signs shall have a minimum of 2, 18" day time flags attached to sign stands during day time hours and if applicable flashing 12", 12v beacons for night time work.**
- **Sign stands shall meet latest CA MUTCD 2014 Edition, Temporary Traffic Control, as well as allowing for 18" to 7' height for signs and spring equipped for windy conditions.**
- **All hours of work shall be dictated by the County specified lane closure charts or as directed by the County Inspector.**
- **Vehicle path of travel shall never be less than 12' in width. Closures and excavation not to exceed what forces expect to excavate per the daily shift.**
- **Roadway shall not be opened until safe for public use. All open trenches must be plated or backfilled prior to public usage.**
- **All areas of excavation must have a valid USA dig tag with corresponding dig ticket number. Proof must be carried with the excavating forces at all times.**

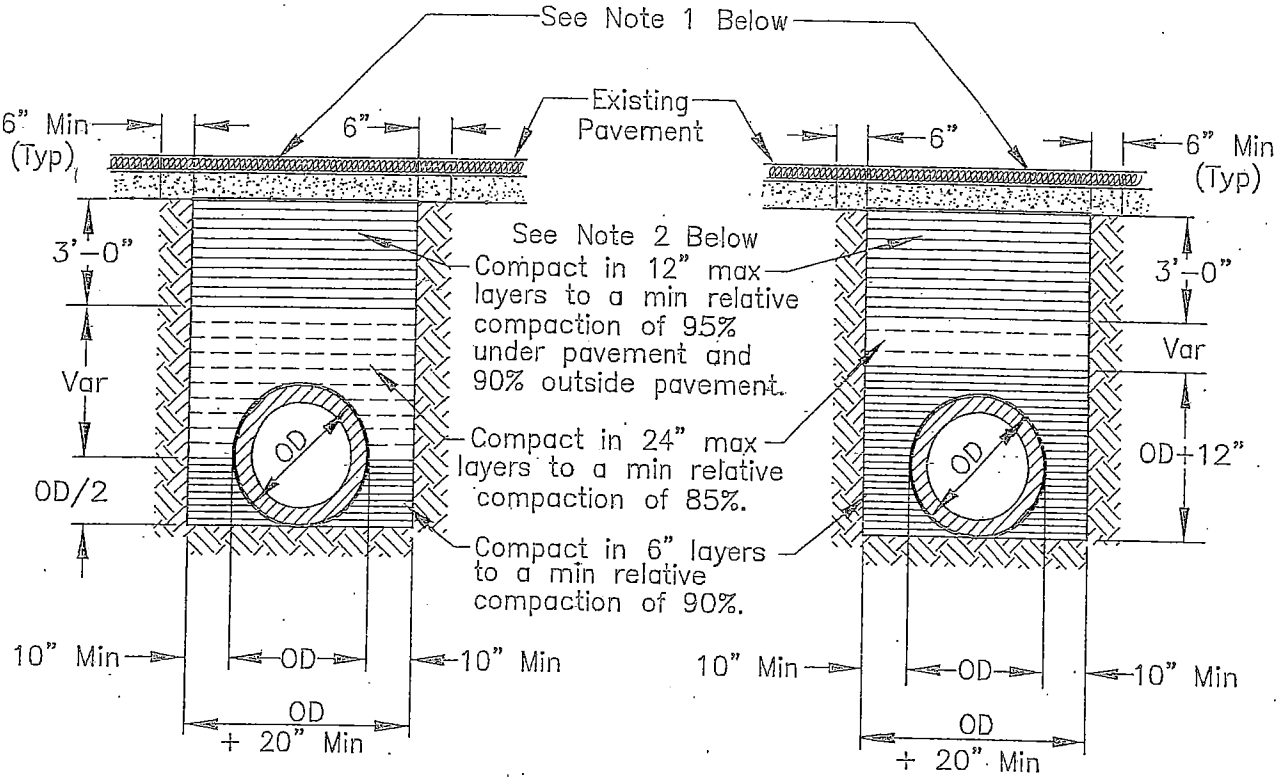

RIGID CONDUIT

FLEXIBLE CONDUIT

NOTES:

1. New pavement shall be 1" thicker than existing pavement, minimum of 0.25 Ft. New base shall be 1" thicker than existing base, min of 0.50 Ft.
2. Select native material or imported granular material as approved by the Director of Public Works. Backfill with materials equal to or better than the existing pavement and base in quality.
3. Relative compaction of materials shall be tested in accordance with the State of California, Dept. of Transportation Testing Manuals, test method No. California 216 or 231.
4. All existing pavement shall be neatly cut to line prior to trench excavation.
5. Jetting or ponding will be permitted within the street right-of-way with a 3 year bond, when approved by the Director of Public Works.
6. When shown by soil composition and compactability, ninety percent (90%) compaction may be used, when approved by the Director of Public Works.
7. Special bedding and backfill requirements may be shown on the plans or specified in the special provisions.

Public Works San Joaquin County
Working for YOU

TYIPCAL TRENCH BACKFILL

COUNTY OF SAN JOAQUIN
DEPARTMENT OF PUBLIC WORKS

Date: DEC 2014

Approved by: Thomas M. Flow

No.	Revision Description	Date

Std. Dwg. No. **R-29**

GENERAL PROVISIONS
GOVERNING INSTALLATION OF SUBSURFACE STRUCTURES AND PIPELINES WITHIN COUNTY ROAD RIGHTS-OF-WAY

PUBLIC CONVENIENCE AND SAFETY:

A. Before obstructing any private driveway entrance or County road traveled way with a trench, spoil bank, equipment or other barrier permitted for any prolonged period of time, the Permittee shall notify the known users of the respective thoroughfare(s) involved, and shall provide access for vehicular and pedestrian traffic to and from the road.
   1. Unless otherwise permitted, all work shall be conducted in such a manner that no less than one lane of the existing County road traveled way will be maintained open to public traffic during working hours in a smooth and safe riding condition(s). Two lanes shall be open after working hours.
   2. In cases where road closure is permitted, the permission to close the road will be granted under the condition that the Permittee notify the following persons and/or agencies of the time, the period of closure, and the detour route at least twenty-four (24) hours prior to said road closure.
      a. The County of San Joaquin Public Works Department
      b. The County of San Joaquin Sheriff's Office
      c. The local postal service
      d. The local fire district
      e. The local school district
      f. The local residents involved
B. Should hazardous conditions relative to the installation operations warrant flagmen, as many capable flagmen as may be necessary shall be provided by the Permittee and stationed in advance of work to warn and direct traffic.
C. Lights, signs and barricades shall be furnished, erected and maintained by the Permittee for the adequate warning and convenience of the public, with particular attention to be taken in this regard after dark.
D. Any excess dirt and/or debris which might be a hazard to either automobile or pedestrian traffic, uncontrollable by lights, signs and barricades, shall be removed from the jobsite daily.

STRUCTURES:

A. Walls of structures shall be such quality and strength that they will resist all pressures and will not crack or be deformed in such a way as to create a hazard or maintenance problem at any time. Therefore, the minimum structural requirements for concrete pipe placed under county road rights-of-way shall conform to the following American Association of State Highway and transportation Officials (AASHTO) designations.
   1. For concrete pipe up to and including thirty-three inches (33") inside diameter, extra strength concrete conforming to AASHTO Designation M 170M.
   2. For concrete pipe thirty-six inches (36") inside diameter and larger, reinforced concrete pipe conforming to AASHTO Designation M 170M Class III.
   3. Plastic pipe conforming to AASHTO Designation M294.
B. All concrete pipe joints with County road rights-of-way shall be sealed against leakage and/or infiltration with rubber gasket in conformance with Section 65-1:06 of the California Standard Specifications, or with other methods as may be permitted under the Special Provisions.
C. Cast-in-place concrete pipe, vitrified clay pipe, spiral welded steel pipe, or corrugated aluminum alloy pipe shall not be installed within the County road rights-of-way unless specifically so stated in the Special Provisions, and only under the conditions as provided.
D. All structures to be buried within the County rights-of-way shall be set at such elevations as to allow minimum coverage of thirty inches (30") to the centerline of the roadways and twelve inches (12") at the bottoms of borrow ditches each side of the roadways. The depths of structures shall be established below a flat plane extending across the rights-of-way, no part of which shall extend above the elevations stated above; manholes, lampholes, valves, etc. not included. Future surface elevations shall be anticipated as nearly as possible and structure elevations shall be established for future adjustments accordingly.
E. The County hereby reserves the right to specify in the Special Provisions the gage and surface treatment of any galvanized corrugated metal pipe that is to be installed.
F. All longitudinal utility facilities are to be established (and dimensioned on sketches) from surveyed centerline of road right-of-way, not from right-of-way (border) lines.

REPAIRS OF THE COUNTY RIGHT-OF-WAY:

A. All excavations shall be backfilled and compacted immediately after work therein has been completed.
B. Trenched shall not be left open farther than 300 feet in advance of pipe laying operations, or 200 feet to the rear thereof, unless otherwise permitted by the Engineer.
C. Unless otherwise permitted under the Special Provisions, backfill shall be placed and mechanically compacted in such a manner that the relative compaction throughout the entire fill within the County road right-of-way shall conform to the percentages of compaction as shown on the Trench detail.
D. Backfill material shall be placed in horizontal uniform layers not to exceed in thickness, before compaction, 0.67 foot in the bedding region, one –foot where 90% compaction is required, and two-feet where 80% compaction is required.
E. No portion of the excavation(s) shall be compacted by ponding or jetting unless a maintenance bond is provided.
F. Gravel backfill material shall be utilized only where specifically so stated on the face of the permit. It shall be compacted by means of a high-frequency internal vibrator, the compactor to be a size and type approved by the Engineer. Points of compaction shall not be greater than 18" centers and to the full depth of the lift.
G. All pavements, curbs, gutters, sidewalks, borrow ditches, pipes, head walls, road signs, trees, shrubbery, and/or other permanent road facilities impaired by or as a result of construction operations at the construction site(s) occupied by materials and/or equipment, shall be restored immediately upon backfilling of the excavation to the original grades and cross sections, and to a condition as good as, or better than existing prior to construction.
H. All surfacing materials of roadways and driveway approaches cut or damaged by or as a result of construction operations, shall be replaced within ONE WEEK following the backfilling of excavation, weather permitting, with compacted layers of surfacing materials at least as thick as the existing, and no less than two inches (2") of asphalt concrete over six inches (6") of aggregate base, both as specified below.
   1. Asphalt Concrete: Combined mineral aggregate shall conform to the quality and gradation requirements for Type "B" one-half inch(1/2) maximum aggregate, coarse or medium gradation as specified in Section 39 of the California Standard Specifications. The bituminous binder to be mixed with mineral aggregate shall be paving asphalt having (Grade PG 64-10), unless otherwise directed by the Engineer. Placement of asphalt concrete surfacing shall conform to the applicable provisions of Section 39 of the California Standard Specifications.
   2. Aggregate Base: Combined mineral aggregates shall conform to the quality and the grading for three-quarter inch (3/4") maximum size aggregate Class 2 Aggregate Base specified in Section 26 of the California Standard Specifications.
I. Before acceptance of repairs to the County road rights-of-way, all unsightly and detrimental dirt, dust and/or debris shall be removed and the construction areas left in a neat and presentable condition(s).
   1. If necessary, County road traveled way and driveway pavements shall be washed with water to remove dirt and dust.
   2. Driveway approaches and field entrance pavements damaged by equipment or spoil banks shall be repaired as directed by the Engineer.
J. Upon request by the County, any settlement, sagging of surface, or cracking of pavement shall be repaired immediately by and at the sole expense of the Permittee for a period of one year following acceptance of the work.

SPECIAL PROVISIONS

Winter Weather Utility Work

1. **SUPERVISION:** The utility company (**permittee**) shall furnish full-time supervision of all work to insure compliance with the permit provision.

2. **START OF WORK:** No work within the County right-of-way shall be started until the utility company representative has made an evaluation of weather conditions and has determined the work can be accomplished under the provisions of the permit.

3. **CLEAN PAVEMENT:** Dirt and mud shall not be deposited on the pavement outside the area of work, and if inadvertently tracked onto the road travel way shall be removed immediately.

4. **DAILY RESTORATION:** Private driveways and road intersections shall be restored daily.

5. **WEATHER-TIGHT CONDITIONS:** All trenches shall be filled and compacted, ditches and other drainage facilities regarded and opened, and the entire work area restored to weather-tight condition prior to any rain.